Ferroli

Force W

High power modular generator

MODULAR POWER

For new buildings and high-power upgrades

FORCE W is a family of high-power condensation modular generators designed to fully meet design requirements in the field of new buildings and upgrades of central heating systems.

FORCE W range generators can be installed individually or with up to four cascade modules for a maximum overall power of 600 kW.

The technical and construction features are in line with the highest standards requested by professionals in the central heating systems industry.

The efficiency of the FORCE W range enables the purchaser to apply for current tax benefits to upgrade climate-control systems.

THE RANGE

The range consists of 5 generators, certified **B23, C13 and C33**

mod. W 60

HEAT INPUT 58.0 KW
EFFECTIVE HEATING OUTPUT (50°C-30°C) 60.8 KW
CLASS ERP A

mod. W 99

HEAT INPUT 96.6 KW
EFFECTIVE HEATING OUTPUT (50°C-30°C) 100 KW
MAX P EFFICIENCY (50°C-30°C) 103.5

mod. W 150

HEAT INPUT 143 KW
EFFECTIVE HEATING OUTPUT (50°C-30°C) 148 KW
MAX P EFFICIENCY (50°C-30°C) 103.5

mod. W 80

HEAT INPUT 74.4 KW
EFFECTIVE HEATING OUTPUT (50°C-30°C) 77.0 KW
MAX P EFFICIENCY (50°C-30°C) 103.5

mod. W 120

HEAT INPUT 113.0 KW
EFFECTIVE HEATING OUTPUT (50°C-30°C) 117 KW
MAX P EFFICIENCY (50°C-30°C) 103.5

CHARACTERISTICS

Product benefits

- **High power thermal condensing module**, designed for single installations or in banks up to 600 kW
- **Hydraulic, gas and flue gas accessories** for bank installation, with 2, 3 and 4 modules
- Heat exchanger with pre-assembled elements in **aluminium-silicon alloy** designed to achieve maximum exchange efficiency and low pressure drops on the water circuit
- Full pre-mixing **combustion unit** with metal fibre micro-flame burner with very low polluting emissions (**Class 6** according to EN 15502-1). The modules can run on **Methane and LPG**
- **Generator protection systems:**
  * Double sensor (delivery and return) system for operation at **ΔT constant**
  * Exchanger overtemperature protection sensor calibrated at 95°C
  * Flue gas safety sensor
  * Water pressure switch with minimum threshold of 0.8 bar
- Hydraulic unit (provided as an accessory) with three-way shut-off valve for discharge into the atmosphere and option of choosing between two **circulators, standard and high head**
- Sealed room air / flue gas circuit and **check valve** on the flue gas ejection duct to size the pressurised manifold
- Module bank management with **self-configurating Master / Slave system** and option of setting the generator on/off sequence
- Electronics on board the machine to manage a **system with two direct zones and one DHW storage** or systems with differentiated temperatures (direct and mixed) in combination with the THETA+ temperature control unit
- **Range Rated** certified generator to adjust the generated power to the system's needs by increasing the efficiency of the system and preserving the mechanics of the machine
- The modules can be controlled and operated remotely:
  * Power or temperature adjustment with 0 - 10V signal
  * Blocking alarm signal for safety and to restart operation
  * **Opentherm (OT) and Modbus** communication protocols with settable parameters

THE PRODUCT IN BRIEF

Device suitable for operation in a **partially protected place** with a minimum temperature of -5°C, as standard

Appliance certified as **"range rated"** according to UNI EN 483

Cascade operation

Remote control of boiler parameters via remote control

Device operates with **climatic control** and sliding system temperature (optional external temperature probe)

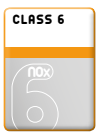

Minimum polluting emissions **(class 6 according to EN 15502-1)** as required by Directive ErP of 26.09.2018 (NOx emissions < 56mg/kWh)

FORCE W
Components

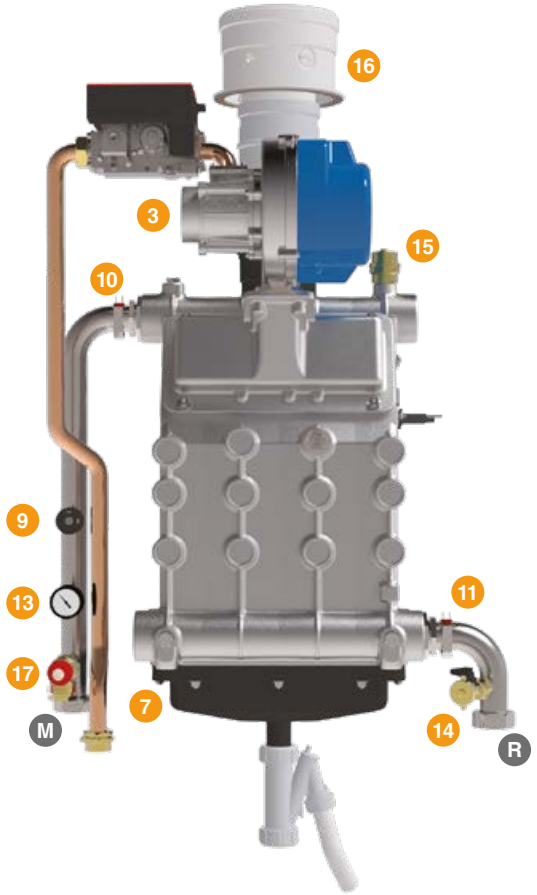

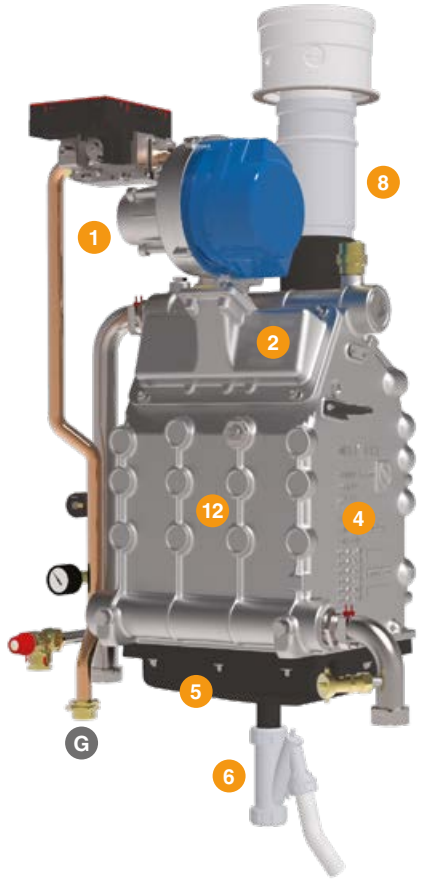

1. Pre-mixing unit
2. Burner. The combustion unit can operate with Methane, LPG and Propane air with conversion kits that can be installed by authorised service technicians. The pre-mixing unit, combined with the low NOx micro-flame burner, has allowed for the Class 6 certification of the generator in accordance with UNI 15502-1
3. Silencer
4. Aluminium heat exchanger in AL/Si alloy single block obtained by die-casting. The water passages inside the heat exchanger are particularly wide to ensure low pressure drops. Completely wet combustion chamber integrated in the casting
5. Condensate collection manifold
6. Condensate discharge
7. Flue gas safety sensor 110°C
8. Swing check valve. A thermostat calibrated at 110°C has been installed on the flue gas manifold to ensure perfect operation of the flue gas exhaust together with a swing check valve with a gravity damper that prevents flue gas return into the boiler. Appliances provided with this device enable design engineers to size the pressurised flue gas channel
9. Water pressure switch min 0.8 bar
10. System delivery temperature sensor
11. System return temperature sensor
12. Heat exchanger over-temperature safety sensor. The heat exchanger's operating temperature is checked by three independent sensors that are positioned in three different detection points. This ensures maximum safety during operation and protects the heat exchanger, increasing its service life.
13. Pressure gauge (the pressure can also be read on the display)
14. Boiler drain cock
15. Air bleed valve
16. Combustion analysis outlet
17. Safety valve 6 bar

M System delivery ø 1' 1/2

R System return ø 1' 1/2

G Gas inlet ø 1'

F Flue gas outlet ø 100/150

FORCE W is provided without a circulator and hydraulic kit with the shut-off valves.
For correct installation, the boiler must always be purchased complete with the following kits:

- Modulating circulator

- System hydraulic kit

CHARACTERISTICS

Control panel

Characterised by a large dot matrix display and keys to set the basic functions of the generator and to select the parameterisation menus.

The interface is designed to make it easier to read the parameters and browse the menus, both for the USER to adjust and set the basic functions and the TECHNICIAN for maintenance and advanced parameters.

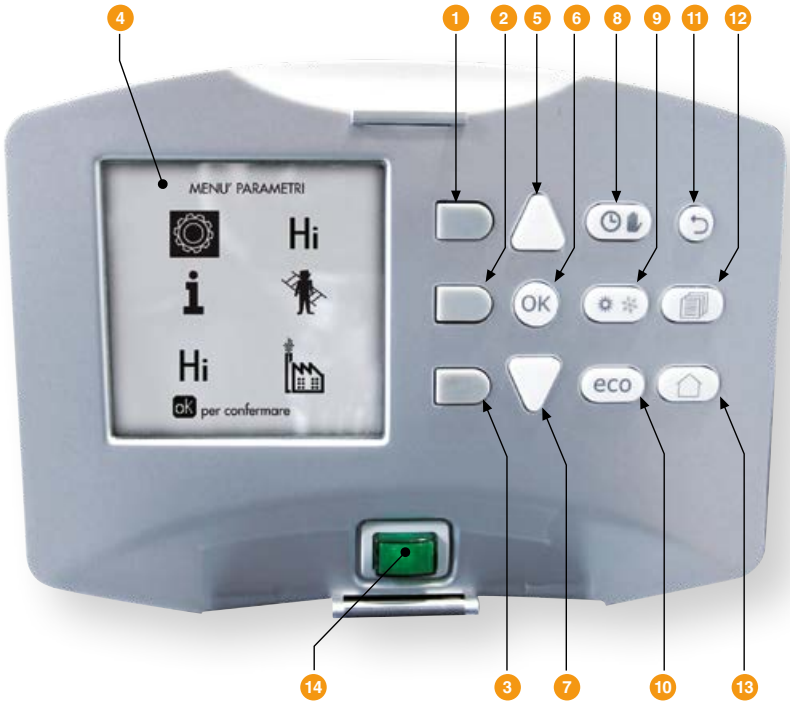

KEY

1 Contextual key 1
2 Contextual key 2
3 Contextual key 3
4 Dot matrix display (example of main screen)
5 Menu navigation key
6 Menu input/confirmation key
7 Menu navigation key
8 DHW/heating Manual/Automatic operation key
9 Summer/Winter mode selection key
10 Economy/Comfort mode selection key
11 Menu exit key
12 Main menu key
13 Home key (back to the main screen)
14 Main switch

CONTEXTUAL KEYS (part. 1, 2, 3) are grey, have no silk-screen printing and can have a different meaning based on the selected menu. It is essential to follow the indications provided by the display (icons and text). For example, by using contextual key 2 (part. 2), it is possible to access information about the device, such as: the temperature of the sensors, the operating power, etc.

DIRECT KEYS (part. 8, 9, 10) always have the same function

MENU/NAVIGATION KEYS
The menu/navigation keys (part. 5, 6, 7, 11, 12, 13) are used to scroll through the various menus implemented in the control panel

Two distinct levels of parameterisation can be accessed from the control panel's main menu:

USER level

Since it is not password-protected, it enables the "system manager" to set the operating mode of the single or cascade generator in order to sync them as much as possible with the type of system based on user requirements

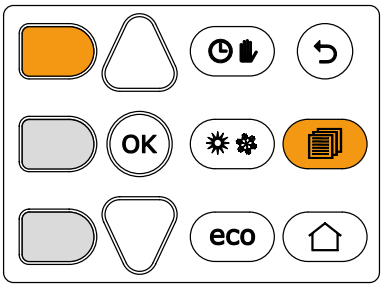

TECHNICIAN level

Since it is password-protected, it enables the "authorised technician" to check and modify the thresholds of each single component of the generator and boiler system.

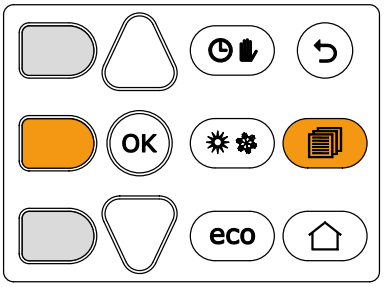

CHARACTERISTICS

Control electronics

For all "PROFESSIONAL" range high-power condensation heat exchangers, Ferroli uses a single electronic platform and the same interface panel that is able to manage correct operation and safety of the generator, cascade installation and the main components of a heating system for domestic hot water production.

POTENTIAL OF THE ELECTRONIC BOARD

INPUT

REMOTE CONTROL
COMMUNICATION PROTOCOLS
Signal 0 – 10 Vdc
Modbus
Opentherm

MASTER SLAVE COMMUNICATION

REMOTE RESET

TEMPERATURE PROBE CASCADE DELIVERY

HEATING REQUEST 1ST ZONE
(A.T. or remote control timer)

HEATING REQUEST 2ND ZONE
(A.T. or remote control timer)

DOMESTIC HOT WATER REQUEST
(A.T. or remote control timer)

OUTPUT

CIRCULATOR 1ST SYSTEM DIRECT ZONE
Power supply 230 Vac - 50 Hz

CIRCULATOR 2ND SYSTEM DIRECT ZONE/CIRCULATOR OR DHW 3-WAY VALVE
Power supply 230 Vac - 50 Hz

DHW RECIRCULATION CIRCULATOR
Power supply 230 Vac - 50 Hz

MASTER-SLAVE COMMUNICATION

FAULT SIGNAL REMOTE CONTROL
Power supply 230 Vac - 50 Hz

ANTILEGIONELLA ON/ BURNER ON SIGNAL REMOTE CONTROL

SUPPORT CONTACT
Power supply 230 Vac - 50 Hz

CHARACTERISTICS

Control electronics

The primary heat generation loop was designed with three FORCE W boilers in cascade, whose operating dynamics are managed by the electronic control on the machine with the MASTER / SLAVE system.

The secondary distribution loop consists of three heating circuits (two mixed at low temperature and one direct at high temperature), a double coil storage for the DHW with an integrated solar system.

The two THETA+ central units (connected to each other by BUS) with the help of room units / sensors (of the RS-L and RFF series) are able to manage every component of the circuits including the solar system.

In the case of systems with a greater number of zones, it is possible to manage up to a maximum of 10 mixed and 5 direct zones, creating a cascade (max 5) of THETA+ central units.

The zones can be controlled by three RFF type room sensors or by three RS-L type remote room units or by a mix of three. The system can be controlled remotely via a BMS (Building Management System) device suitably connected to the control system with its own communication device.

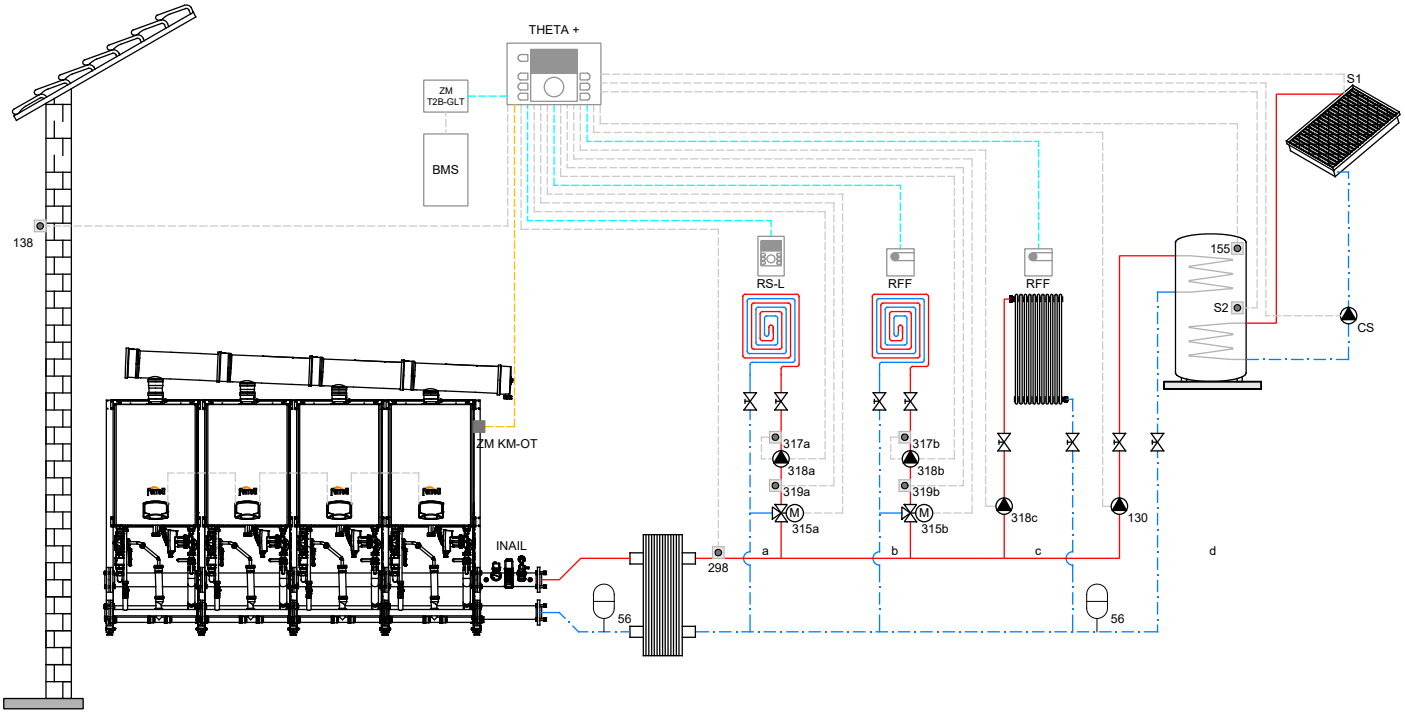

KEY

THETA+ Central unit control for the thermoregulation and cascade manager **ZM KM-OT** Accessories for the cascade management via Open-Therm **RS-L** Remote room unit **RFF** Room sensor **ZM T2B-GLT** Interface for Building Management System (BMS) **BMS** Building Management System **S1** Flow probe for solar system (PT 1000) **S2** Temperature probe for DHW tank (supplied as standard with THETA+) **155** Temperature probe for DHW tank (supplied as standard with THETA+) **130** DHW circulator **CS** Solar system circulator **a** low temperature mixed zone **b** Low temperature mixed zone **c** High temperature direct zone **d** DHW circuit with tank, double exchanger type **315 a/b** Motorized mixing valve **318 a/b/c** Heating system circulator **317 a/b** Safety thermostat **319 a/b** Flow probe for mixed zone (supplied as standard with THETA+) **298** Probe for flow heating system collector (supplied as standard with THETA+) **138** External sensor (supplied as standard with THETA+) **56** Expansion vessel

TECHNICAL DATA

Dimensions and summary table

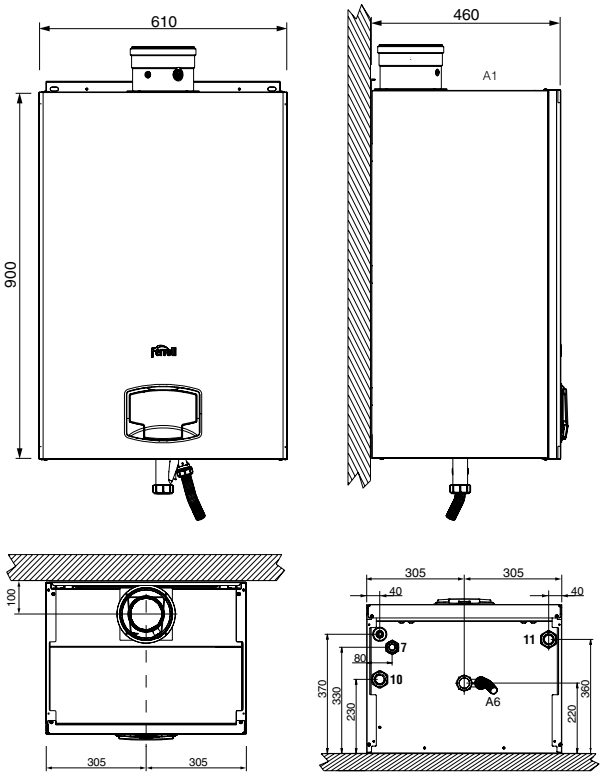

KEY

7 Ø 3/4" gas inlet
10 Ø 1" ½ System delivery
11 Ø 1" ½ System return
A6 Condensate discharge
A1 Flue gas outlet Ø 100/150 mm

FORCE		W 60	W 80	W 99	W 120	W 150
ERP Class		A	-	-	-	
Fuel		MTN / LPG	MTN / LPG	MTN / LPG	MTN / LPG	MTN / LPG
Heating max heat input	kW	58	74.4	96.6	113	143
Heating min heat input	kW	15	15	19	19	24
Heating max heat output (80/60°C)	kW	57	72.9	94.7	110.5	140
Heating min heat output (80/60°C)	kW	14.7	14.7	18.7	18.7	23.6
Heating max heat output (50/30°C)	kW	60.8	77	100	117	148
Heating min heat output (50/30°C)	kW	16.3	16.3	20.5	20.5	25.9
MaxP efficiency (80/60°C)	%	98.3	98	98	97.8	97.8
MinP efficiency (80/60°C)	%	98.3	98.3	98.3	98.3	98.3
MaxP efficiency (50/30°C)	%	104.8	103.5	103.5	103.5	103.5
MinP efficiency (50/30°C)	%	108.5	108.5	108	108	108
Efficiency 30%	%	108.6	108.6	108.1	108.1	108.1
NOx emissions class	-	6	6	6	6	6
NOx (O_2=0%) weighted	mg/kWh	50	54	39	38	40
MaxP flue gas temperature (80/60°C)	°C	64	70	71	72	73
MinP flue gas temperature (80/60°C)	°C	60	60	60	60	60
MaxP flue gas temperature (50/30°C)	°C	44	48	53	54	54
MinP flue gas temperature (50/30°C)	°C	30	30	30	30	30
MaxP flue gas flow rate	g/s	26	34	44	51	65
MinP flue gas flow rate	g/s	7	7	9	9	11
Max heating working pressure	bar	6	6	6	6	6
Min heating working pressure	bar	0.8	0.8	0.8	0.8	0.8
Max heating temperature	°C	85	85	85	85	85
Protection rating	IP	IPX4D				
Supply voltage	V/Hz	230/50				
Absorbed electric power	W	60	93	164	230	250
Heating water content	litres	4.2	4.2	5.6	5.6	6.7
Empty weight	kg	67	67	76	76	86
Appliance type		B23 - C13 - C33				

TECHNICAL DATA

Diagrams of generator pressure drops

FORCE W 60 - FORCE W 80 - FORCE W 99 - FORCE W 120

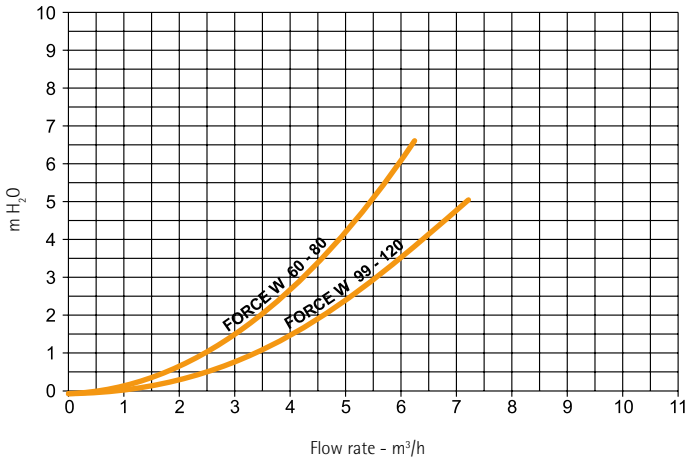

FORCE W 150

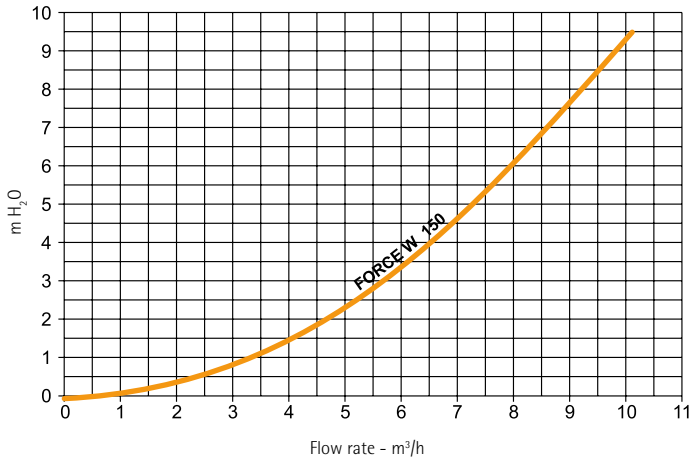

TECHNICAL DATA

Characteristic circulator head/flow rate curves

CIRCULATOR KIT
7 m

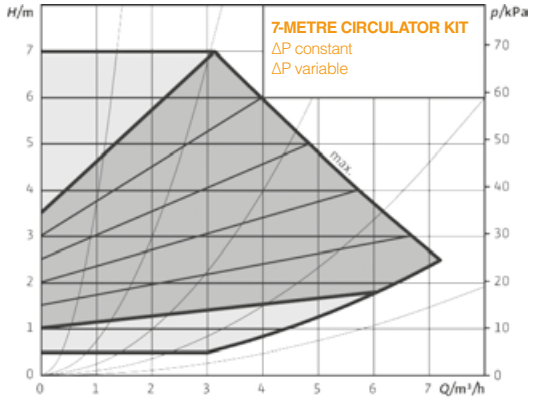

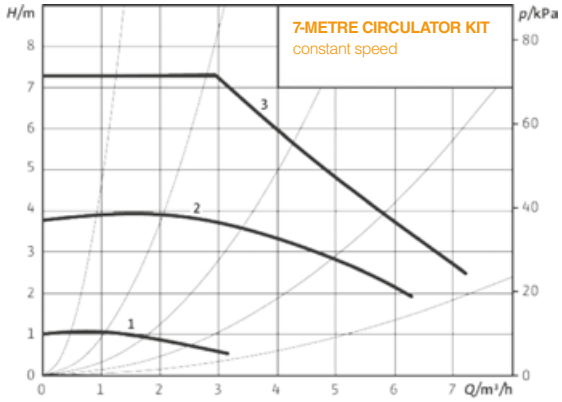

CIRCULATOR KIT
10 m

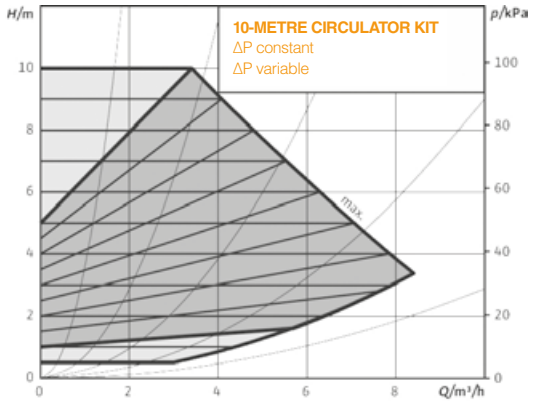

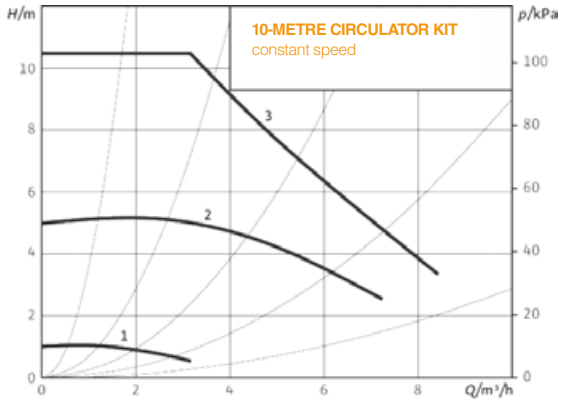

CASCADE INSTALLATION

Characteristics and strong points

The **FORCE W cascade system** has been designed by drawing from Ferroli's extensive experience in field of central heating generators and with feedback from design engineers and installers. All boiler parts have designed to **facilitate coil installation**. The generators are supplied (optional) with all the accessories for rapid, sound and safe **cascade central heating installation:**

1 The FORCE W range can be coupled in banks with **2, 3 and 4 generator combinations** up to a **maximum power of approximately 600 kW, with a modulation ratio up to 1:32.**

2 The **dimensions of generators** and **positioning of fittings** are **identical**. All range models are perfectly interchangeable with each other.

3 Each cascade configuration is complete with flue gas, hydraulic and gas accessories.

4 FORCE W is fitted with a standard **swing check valve that prevents flue gas return into the boiler**. This device enables pressurised flue gas duct designs with much smaller and more cost-effective diameters.

5 The electronics fitted as per standard was designed to autonomously manage the dynamics of several generators in cascade, with MASTER-SLAVE logic**, with maximum 6 generators**.

6 By setting the parameters of the cascade MASTER board, **the ignition sequence of the various modules can be set and rotated so as to evenly divide the number of** operating hours.

GENERATORS				COIL MODULES	HEAT INPUT	HEAT OUTPUT		CASCADE MODULATION	
						50 / 30°C	80 / 60°C	MinP - MaxP 50 / 30°C	
1	2	3	4		kW	kW	kW	kW	MinP / MaxP
60	60			2	116.0	123.0	113.0	15.7 - 123.0	1:8
60	80			2	132.4	138.5	129.4	15.7 - 138.5	1:9
80	80			2	148.8	154.0	145.8	14.7 - 154.0	1:10
60	120			2	171.0	178.5	166.8	15.7 - 178.5	1:11
80	120			2	187.4	194.0	183.2	14.7 - 194.0	1:13
99	120			2	209.6	217.0	204.9	20.5 - 217.0	1:10
120	120			2	226.0	234.0	220.6	20.0 - 234.0	1:12
120	150			2	272.0	265.0	250.3	20.0 - 265.0	1:13
150	150			2	318.0	296.0	280.0	25.9 - 296.0	1:11
99	120	120		3	322.6	334.0	315.2	20.5 - 334.0	1:16
120	120	120		3	339.0	351.0	330.9	20.0 - 351.0	1:18
80	150	150		3	392.4	373.0	352.9	14.7 - 373.0	1:25
99	150	150		3	414.6	396.0	374.6	20.5 - 396.0	1:19
120	150	150		3	431.0	413.0	390.3	20.0 - 413.0	1:21
150	150	150		3	477.0	444.0	420.0	25.9 - 444.0	1:17
120	120	120	120	4	452.0	468.0	441.2	20.0 - 468.0	1:23
60	150	150	150	4	535.0	505.5	476.5	15.7 - 505.5	1:32
120	120	150	150	4	544.0	530.0	500.6	20.0 - 530.0	1:26
120	150	150	150	4	590.0	561.0	530.3	20.0 - 561.0	1:28
150	150	150	150	4	636.0	592.0	560.0	25.9 - 592.0	1:23

CASCADE INSTALLATION

Operating logic

The standard electronics installed on each FORCE W module can control a bank of 6 generators without using any optional additional control units.

The logic chosen by the design engineers is MASTER / SLAVE and, when duly connected, it ensures that all coils work as a single generator managed by a single control (MASTER) able to:

- Distinguish the number of generators installed and connected in bank and identify the system components connected to the MASTER generator terminal board.

- Modify the burner's ignition sequence independently in order to distribute the total number of operating hours equally.

- Using a specific parameter, it is possible to customise the switch-off logic of the bank generators (Parallel or Sequential), without the need to resort to optional sequence control units or to additional control modules.

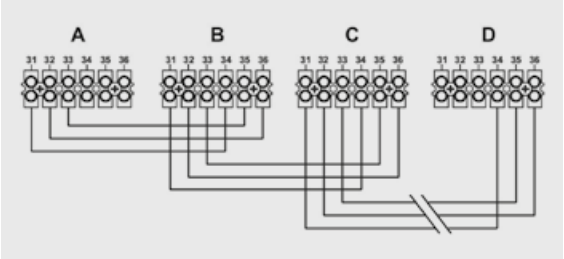

A 1st MASTER module
B 2nd SLAVE module
C 3rd SLAVE module
D 6th SLAVE module

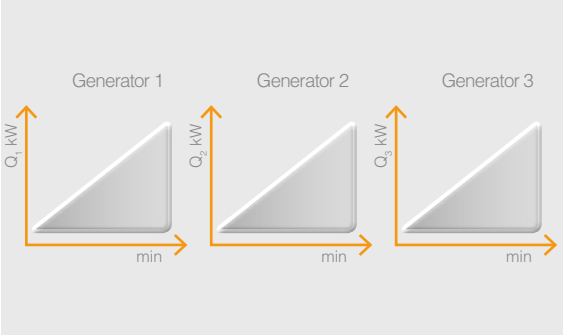

Parallel operation

Parallel operation of the modules provides for simultaneous ignition, power modulation and switch-off of the burners.
This solution allows for maximum system efficiency since most generators running at the lowest power enable maximum condensation.
The modulation range of the system's power is instead limited.

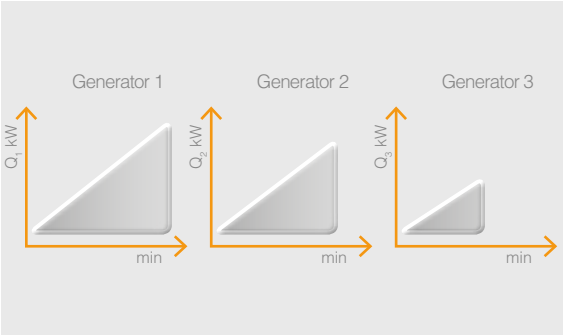

Sequential operation

The ignition and power modulation of the burners with sequential operation enable a wide modulation range that runs from minimum power of a single generator to a total maximum power of all burners running together.
This makes the system more flexible compared to the system's heating requirements, but at the expense of the loss of a certain degree of energy efficiency.

CASCADE INSTALLATION

Accessories

ACCESSORIES

NECESSARY TO CORRECTLY INSTALL FORCE W GENERATORS IN A BANK

							6	7	1		2	3	4	8	9
							Self-standing frame (start) *	Self-standing frame (extension)	7-m modulating circulator	10-m modulating circulator	hydraulic kit: 1 x MF 1"1/2 cock, 1 x 3-way T 1" 1/2 cock, 1 x 1" 1/2 check valve, 1 x MM	hydraulic (DN65 delivery and return), gas (DN40) manifolds kit for bank installation	Blind flange kit DN65	Flue gas manifold starter kit (Ø 200 mm) *	Flue gas manifold extension kit (Ø 200 mm) *
P_{out} (50/30°C)	MODULES FORCE W					Tot. modules									
	60	80	99	120	150		042076X0	042077X0	042070X0	042071X0	042072X0	042074X0	042073X0	041091X0	041092X0
62	1					1	1	-	1	1	1	1	1	-	-
77		1				1	1	-	1	1	1	1	1	-	-
98			1			1	1	-	1	1	1	1	1	-	-
117				1		1	1	-	1	1	1	1	1	-	-
148					1	1	1	-	1	1	1	1	1	-	-
124	2					2	1	1	2	2	2	2	1	1	2
139	1	1				2	1	1	2	2	2	2	1	1	2
154		2				2	1	1	2	2	2	2	1	1	2
179	1			1		2	1	1	2	2	2	2	1	1	2
194		1		1		2	1	1	2	2	2	2	1	1	2
215			1	1		2	1	1	2	2	2	2	1	1	2
234				2		2	1	1	2	2	2	2	1	1	2
265				1	1	2	1	1	2	2	2	2	1	1	2
296					2	2	1	1	2	2	2	2	1	1	2
332			1	2		3	1	2	3	3	3	3	1	1	3
351				3		3	1	2	3	3	3	3	1	1	3
373		1			2	3	1	2	3	3	3	3	1	1	3
394			1		2	3	1	2	3	3	3	3	1	1	3
413				1	2	3	1	2	3	3	3	3	1	1	3
444					3	3	1	2	3	3	3	3	1	1	3
468				4		4	1	3	4	4	4	4	1	1	4
530				2	2	4	1	3	4	4	4	4	1	1	4
561				1	3	4	1	3	4	4	4	4	1	1	4
592					4	4	1	3	4	4	4	4	1	1	4

* * Flue gas accessories certified for installation in a utility room or in a protected place

ACCESSORIES

UPON REQUEST FOR CONFIGURATION ACCORDING TO PROJECT SPECIFICATIONS

	DESCRIPTION		CODE
	additional sensor for storage tank and/ or system flow for cascade	cable 2 m	1KWMA11W
		cable 5 m	043005X0
	outdoor probe		013018X0
	hydraulic separator DN 32 For installation until 150 kW. The installer is responsible for the connection with the generator		042086X0
	hydraulic separator DN 65 For installation from 151 kW to 300 kW		042078X0
	installation kit for hydraulic separator. For installation from 151 kW to 300 kW		042079X0
	hydraulic separator DN 65 For installation from 301 kW to 600 kW		042080X0
	installation kit for hydraulic separator. For installation from 301 kW to 600 kW		042081X0
	gasketed plates heat exchanger. The hydraulic connection between the generator and the exchanger is the responsibility of the installer		
	Temperature controls		
	Neutralisers		

CASCADE INSTALLATION

For outdoors

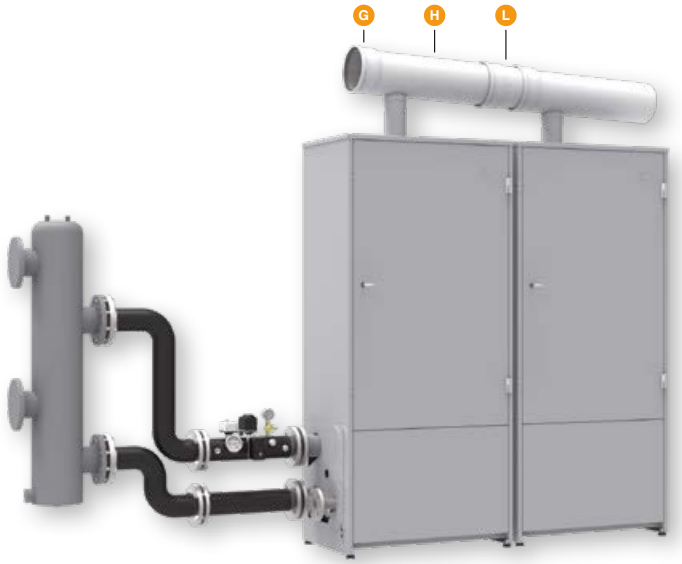

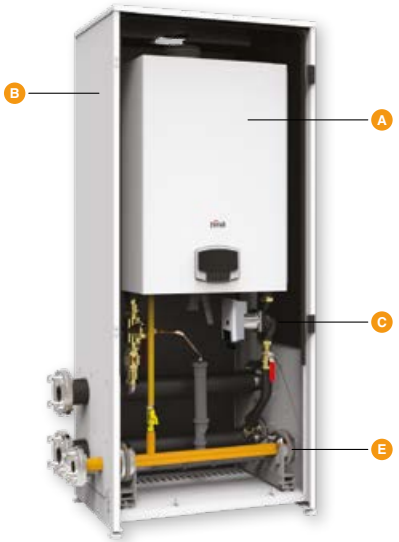

ACCESSORIES

NECESSARY TO CORRECTLY INSTALL FORCE W GENERATORS IN A BANK

	A						B	C		E	G	H	L	
							Technical cabinet equipped for outdoors	7-m modulating circulator	10-m modulating circulator	Blind flange kit DN65	Flue gas manifold starter kit (Ø 200 mm) *	Flue gas manifold extension kit (Ø 200 mm) *	Flue manifold adapter F 200 mm	Smoke chimney F 100 mm (for unprotected roof installations)
P_{out} (50/30°C)	MODULES FORCE W					Tot. modules								
	60	80	99	120	150		046058X0	042070X0	042071X0	042073X0	041091X0	041092X0	041093X0	041094X0
62	1					1	1	1	1	1	-	-	-	1
77		1				1	1	1	1	1	-	-	-	1
98			1			1	1	1	1	1	-	-	-	1
117				1		1	1	1	1	1	-	-	-	1
148					1	1	1	1	1	1	-	-	-	1
124	2					2	2	2	2	1	1	2	1	2
139	1	1				2	2	2	2	1	1	2	1	2
154		2				2	2	2	2	1	1	2	1	2
179	1			1		2	2	2	2	1	1	2	1	2
194		1		1		2	2	2	2	1	1	2	1	2
215			1	1		2	2	2	2	1	1	2	1	2
234				2		2	2	2	2	1	1	2	1	2
265				1	1	2	2	2	2	1	1	2	1	2
296					2	2	2	2	2	1	1	2	1	2
332			1	2		3	3	3	3	1	1	3	2	3
351				3		3	3	3	3	1	1	3	2	3
373		1			2	3	3	3	3	1	1	3	2	3
394			1		2	3	3	3	3	1	1	3	2	3
413				1	2	3	3	3	3	1	1	3	2	3
444					3	3	3	3	3	1	1	3	2	3
468				4		4	4	4	4	1	1	4	3	4
530				2	2	4	4	4	4	1	1	4	3	4
561				1	3	4	4	4	4	1	1	4	3	4
592					4	4	4	4	4	1	1	4	3	4

* Flue gas accessories certified for installation in a utility room or in a protected place

ACCESSORIES

UPON REQUEST FOR CONFIGURATION ACCORDING TO PROJECT SPECIFICATIONS

	DESCRIPTION		CODE
	additional sensor for storage tank and/or system flow for cascade configurations with and without hydraulic separator	cable 2 m	1KWMA11W
		cable 5 m	043005X0
	outdoor probe		013018X0
	Single empty cabinet for outdoors		046060X0
	Double empty cabinet for outdoors		046061X0
	hydraulic separator DN 32. For installation until 150 kW. The installer is responsible for the connection with the generator		042086X0
	hydraulic separator DN 65 For installation from 151 kW to 300 kW		042078X0
	installation kit for hydraulic separator. For installation from 151 kW to 300 kW		042079X0
	hydraulic separator DN 65 For installation from 301 kW to 600 kW		042080X0
	installation kit for hydraulic separator. For installation from 301 kW to 600 kW		042081X0
	gasketed plates heat exchanger. The hydraulic connection between the generator and the exchanger is the responsibility of the installer		
	Temperature controls		
	Neutralisers		

HYDRAULIC SEPARATORS

Characteristics - Accessories to complete installation

The hydraulic separator guarantees independence between the primary circuit (generator) and the secondary circuit (system) without any disturbance or interference between them. The separator is proposed complete with deaerator, sludge separator and is fully insulated. **CHARACTERISTICS:** Max operating pressure: 6 bar - Temperature range: 0 -100°C - Connections: DN 32 / DN 65 / DN 100

HYDRAULIC SEPARATOR **INSTALLATIONS UP TO 150 KW**

Hydraulic separator DN 32
The installer is responsible for the connection with the generator
042086X0

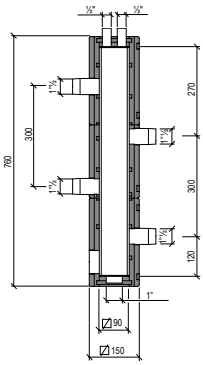

MODEL		DN 32	DN 65	DN 100
Flow rate	m³/h	6,5	18	30
Capacity	l	4,8	21	46
Max temperature	°C	100		
Max pressure	bar	6		
Raw material	-	ST37.1 steel		
Insulation	-	EPP Black - 40 g/l		

HYDRAULIC SEPARATOR **INSTALLATIONS 151 - 300 kW**

Hydraulic separator DN 65
042078X0

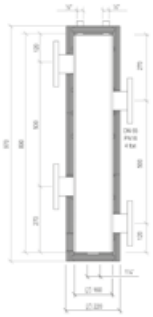

DN 65 separator hydraulic connection manifolds
042079X0

HYDRAULIC SEPARATOR **INSTALLATIONS 301 - 600 kW**

Hydraulic separator DN 100
042080X0

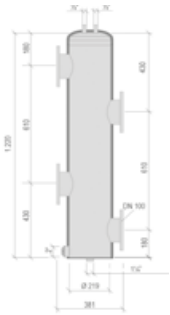

DN 100 separator hydraulic connection manifolds
042081X0

COMPLETION ACCESSORIES

Temperature control

Neutralisers

Kit for management with thermostat (not supplied) of a DHW storage tank (for heating only boilers)
013017X0

Additional sensor for storage tank and/or system delivery for cascade configurations with and without hydraulic separator
2 m cable **1KWMA11W** - 5 m cable **043005X0**

Outdoor probe
013018X0

ø 100 flue gas terminal
1KWMA29K

90° coaxial bend, 360° swivel with 45° pitch
ø 100/150 mm
041107X0

1 mt concentric extension, Ø 100/150 mm
041108X0

0,5 mt concentric extension, Ø 100/150 mm
041109X0

1 mt concentric horizontal terminal pipe, Ø 100/150 mm. Included wall gasket Ø 150 mm
041110X0

1 mt concentric vertical terminal pipe, Ø 100/150 mm
041111X0

wall gasket Ø 150 mm
041112X0

90° bend kit in PPS ø 100 mm
041077X0

1 m PPS ø 100 mm MF flue gas duct kit ø 100
041073X0

PLATE EXCHANGERS

Phe - She

Ferroli offers a full range of plate heat exchangers made of braze-welded steel for small and medium systems and a type that can be inspected for systems up to approximately 1 MW.

PHE

HEAT EXCHANGERS WITH INSPECTABLE STEEL PLATES

- Stainless steel plate inspectable heat exchangers (AISI 316L), for medium and small power systems
- Single-pass circuit in counter-current with four threaded stainless steel connections (AISI 316)
- Plug-in NBR gaskets (installed without glue or silicones)
- The optional kits of ground support brackets and insulation are available for the entire range
- Ideal for replacing a heat generator in an existing system or to combine it with systems with high flow rates

- Maximum operating pressure: 10 bar
- Max operating temperature: 100°C

SHE

HEAT EXCHANGERS WITH BRAZE-WELDED STEEL PLATES

- Stainless steel plate heat exchangers (AISI 316L), copper brazed, for medium and small power systems
- Single-pass circuit in counter-current with four threaded stainless steel connections (AISI 304)
- Ideal for replacing a heat generator in an existing system or to combine it with systems with high flow rates

- Maximum operating pressure: 16 bar
- Max operating temperature: 200°C

NOTICE FOR SALES AGENTS:
With a view to constantly improve its production range and customer satisfaction levels, the Company hereby specifies that aesthetic and/or dimensional features, specifications and accessories may be subject to changes.

Please place the utmost care to ensure all technical and/or sales documents (lists, catalogues, brochures, etc.) provided to the final Customer are updated according to the latest edition.

code 89AG3027/00 - 11.2021

Ferroli SpA
37047 San Bonifacio (VR) Italy - Via Ritonda 78/A
tel. +39.045.6139411
fax +39.045.6100233
www.ferroli.com
export@ferroli.com